Baumer electric

Sensor solutions

FPDM 16P5101
(Photoelectric light barriers)

polarization filter	yes
function	retro-reflective sensor (rrs)
emitter / receiver	-
output	PNP
output switch state	light/dark operate
housing style	rectangular
width /diameter	15,4 mm
height	50 mm
depth	50 mm
housing material	die-cast zinc
connection	cable
nominal range Sn	0 - 4,5 m
actual range Sb	0 - 4 m
beam focal point	-
repeatability	-
output indicator	LED yellow
alignment aid / soiled lens indicator	flashing LED
wave length	660 nm
light source	pulsed red diode
laser class (norm)	-
voltage supply range +Vs	10 - 30 VDC
supply current average/peak value	26 / 36 mA
switching current	< 200 mA
voltage drop	< 1,8 VDC
response time / release time	< 1 ms
sensitivity adjustable	-
short circuit protection	yes
reverse polarity protection	yes
temperature range	-25 ... +65 °C
protection class	IP 67
connectors	none

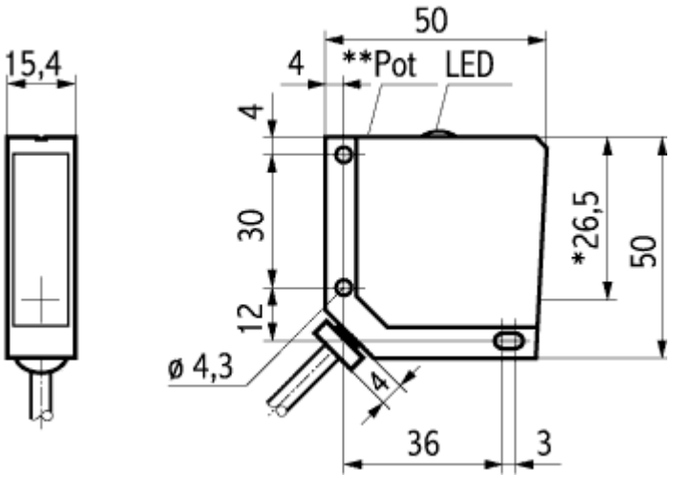

* emitter axis
** Pot only on versions FPDM 16x5105 und FPDM 16x5105/S14